# CITY OF BURNSVILLE

## TIMBER RETAINING WALLS

- WALLS OVER 4' NEED A PERMIT
- TREATED TIMBERS REQUIRED
- WALLS OVER 7' OR WITH TOP OR SPECIAL LOADING NEED AN ENGINEER
- DEADMAN TIEBACKS MAY BE TIMBER OR STEEL; THEY MUST BE OUTSIDE 45° LINE
- NAILS MUST PASS THROUGH 2 TIMBERS INTO 3RD

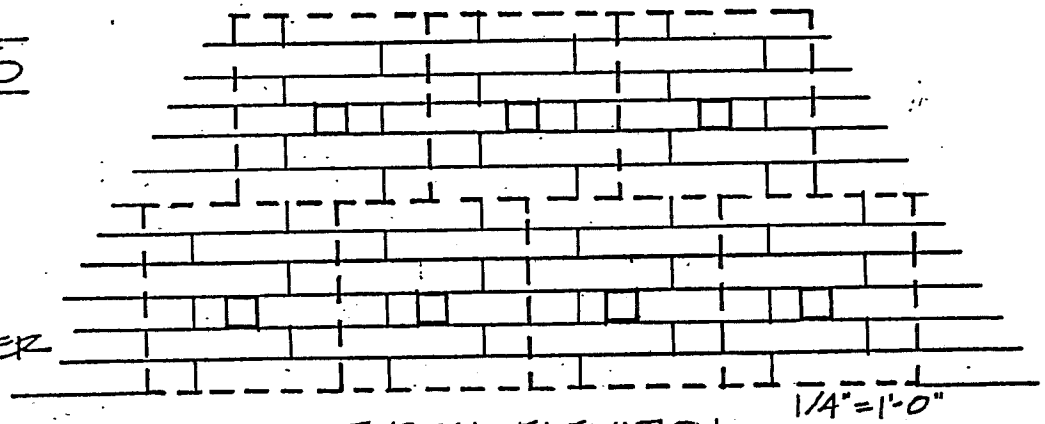


TYPICAL ELEVATION
SHOWING TYPICAL DEADMAN LAYOUT
1 DEADMAN PER 16 SQ. FT. OF WALL
STAGGERED ROWS

## TYPICAL SECTIONS @ 1/2"=1'-0"

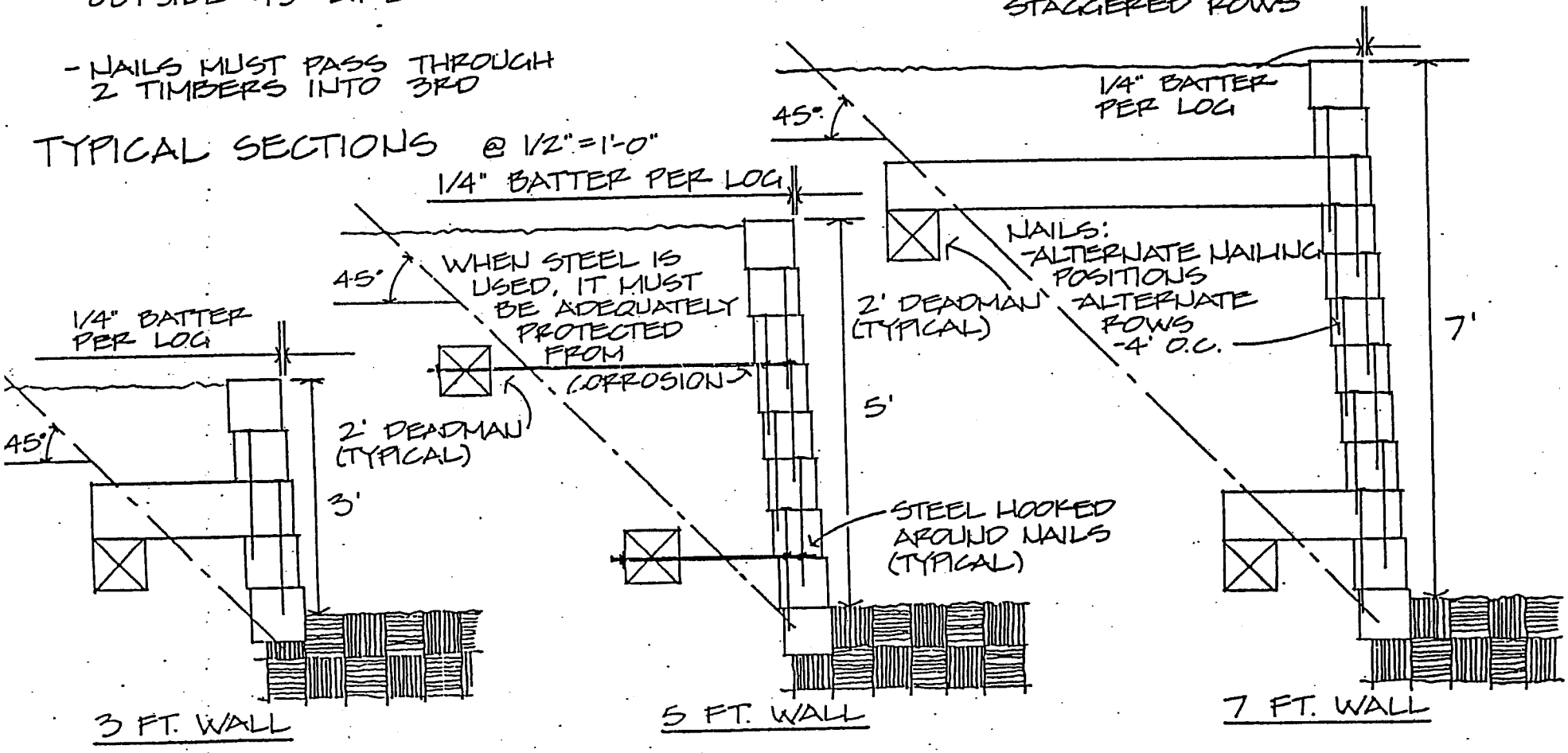

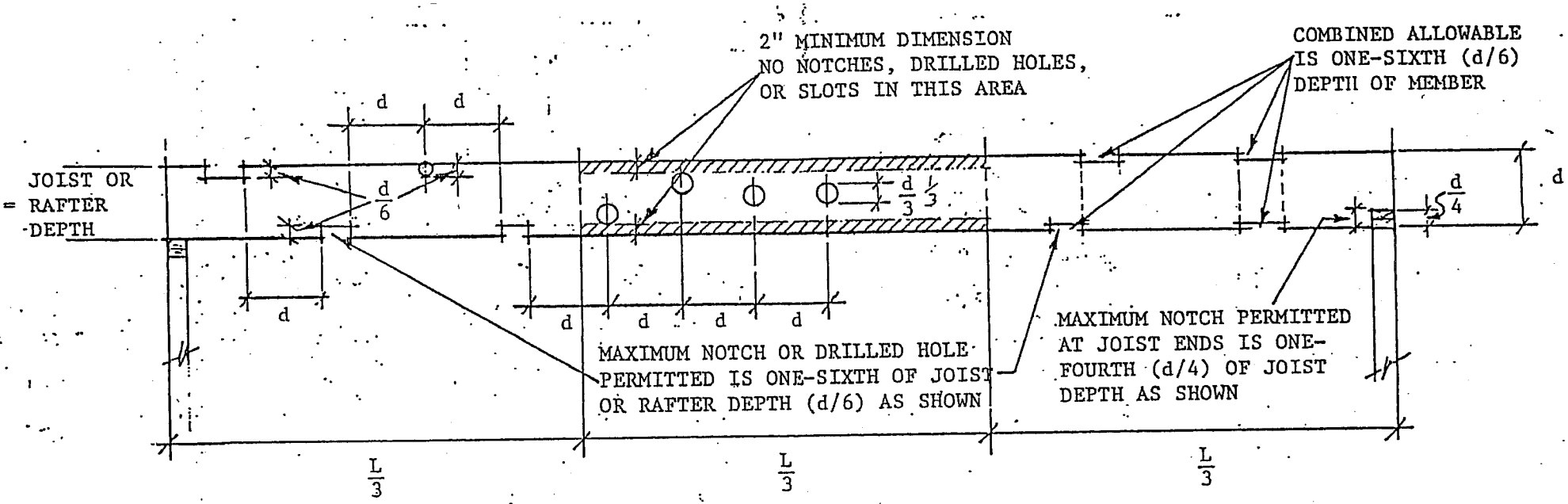


GENERAL NOTES: 1. HOLES, NOTCHES, AND SLOTS ARE NOT TO BE LOCATED ADJACENT TO UNSOUND OR LOOSE KNOTS.

2. PREFERRED LOCATION OF NOTCH IS AT TOP OF MEMBER.
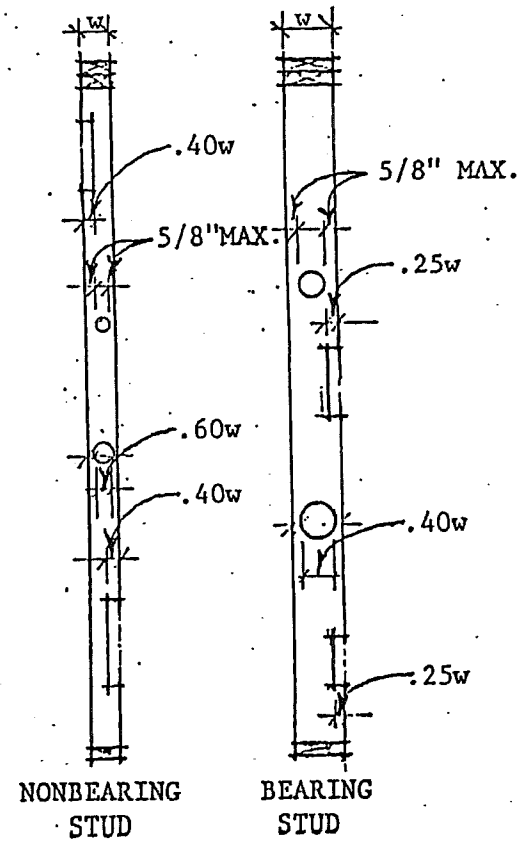
| ALLOWABLE NOTCH AND BORED HOLE DIMENSIONS | | | | | | | |
|---|---|---|---|---|---|---|---|
| JOISTS AND RAFTERS | | | | | BEARING STUDS | | NONBEARING STUDS |
| NOMINAL | ACTUAL | d/6 | d/4 NOTCH | d/3 | .25w | .40w | .60w |
| 4" | 3 1/2 | 5/8 | 7/8 | 1 1/8 | 7/8 | 1 3/8 | 2 1/8 |
| 6" | 5 1/2 | 7/8 | 1 3/8 | 1 7/8 | 1 3/8 | 2 1/4 | 3 1/4 |
| 8" | 7 1/4 | 1 1/4 | 1 7/8 | 2 3/8 | 1 7/8 | 2 7/8 | 4 3/8 |
| 10" | 9 1/4 | 1 1/2 | 2 3/8 | 3 1/8 | | | |
| 12" | 11 1/4 | 1 7/8 | 2 7/8 | 3 3/4 | | | |
| 14" | 13 1/4 | 2 1/4 | 3 3/8 | 4 3/8 | | | |